TMD - FILLER BREATHERS WITH FILTER
TMDF - FILLER BREATHERS WITH FILTER
TMDF/BR - FILLER BREATHERS WITH SINTERED BRONZE FILTER

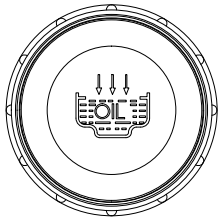

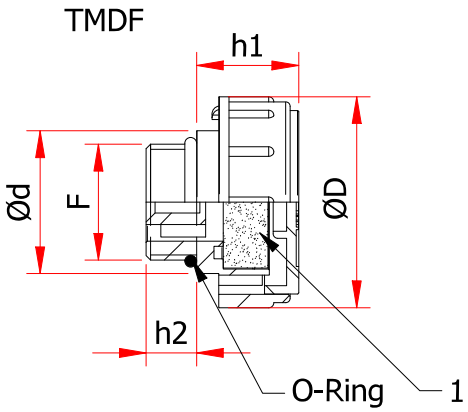

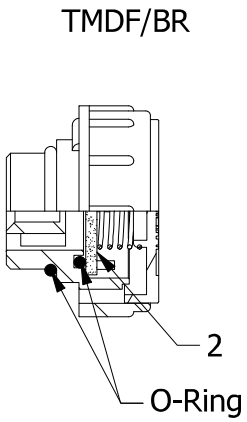

1 = Polyurethane air filter

2 = Sintered bronze filter

Code	Code	Code	F	D	d	h1	h2
TMD/38	TMDF/38	TMDF/38/BR	G 3/8"	36	23	21	11
TMD/12	TMDF/12	TMDF/12/BR	G 1/2"	41	28	21	12
TMD/34	TMDF/34	TMDF/34/BR	G 3/4"	47	33	22	12
TMD/1	TMDF/1	TMDF/1/BR	G 1"	52	38	25	12
TMD/114	TMDF/114	TMDF/114/BR	G 1 1/4"	63	49	29	13
TMD/112	TMDF/112	TMDF/112/BR	G 1 1/2"	63	55	29	13,5
TMD/14.15	TMDF/14.15	TMDF/14.15/BR	M 14x1,5	41	28	21,5	12
TMD/16.15	TMDF/16.15	TMDF/16.15/BR	M 16x1,5	36	23	21	11
TMD/18.15	TMDF/18.15	TMDF/18.15/BR	M 18x1,5	41	28	21	12
TMD/20.15	TMDF/20.15	TMDF/20.15/BR	M 20x1,5	41	28	21	12
TMD/22.15	TMDF/22.15	TMDF/22.15/BR	M 22x1,5	41	28	21	12